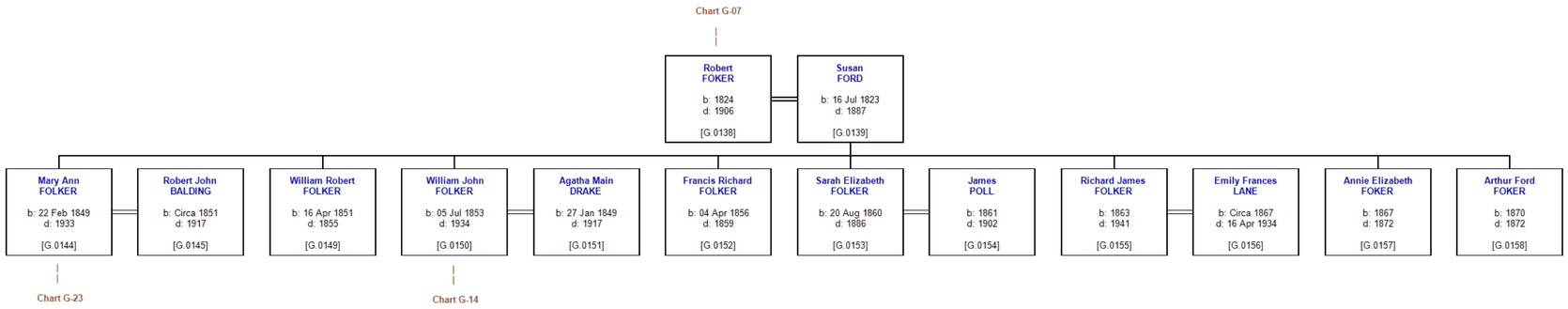Family of
ROBERT FOKER
of Snettisham